Control dc motor speed

system 1 February 19, 2011, 10:35pm

Hi I have a dc motor and I was wondering if there some kind of way I can control its speed by code?
its connected with an external power source and I control it by code with a transistor:

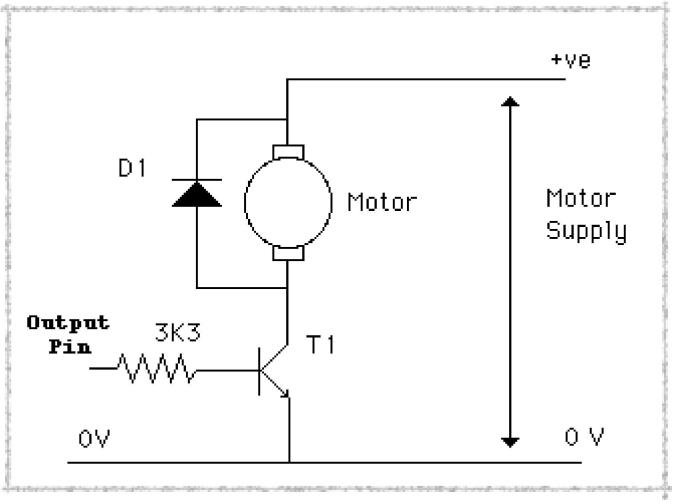

retrolefty 2 February 19, 2011, 10:43pm

> tomer1510:
> Hi I have a dc motor and I was wondering if there some kind of way I can control its speed by code?
> its connected with an external power source and I control it by code with a transistor:
>
> 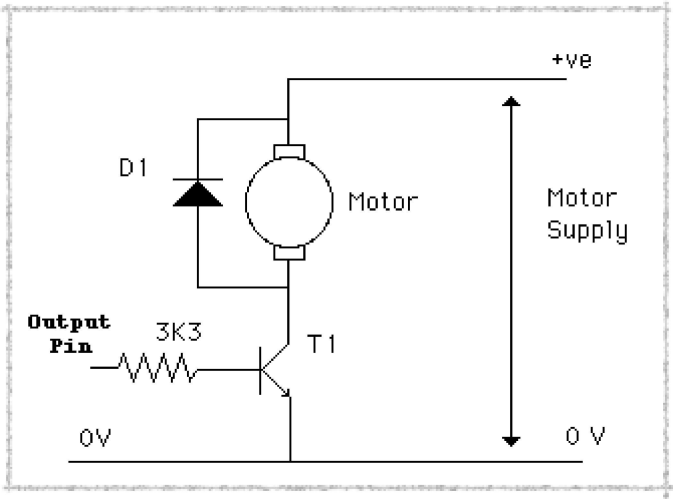
>

Yes, that circuit will work fine with an Arduino. Note the ground wire goes to both the external power source and the arduino ground pin. Be sure the transistor you use is rated will above the maximum current

and voltage that the motor requires.

You can control the speed of the motor using the Arduino analogWrite(pin,speed) command. Where pin is the correct output pin to use (see link below) for PWM outputs and speed is 0-255, where 0 is full stop, and 255 is max rpm that the external voltage allows the motor to turn at.

> **analogWrite() - Arduino Reference**
>
> The Arduino programming language Reference, organized into Functions, Variable and Constant, and Structure keywords.

Lefty

---

system 3 February 19, 2011, 10:48pm

which pins are the analog ones?
because it says certain pin numbers but they are all under digital on my board
and under analog I have "analog in" which I guess means input and not output

---

retrolefty 4 February 19, 2011, 11:16pm

Yes it is confusing. The Arduino team decided in their wisdom to name the PWM output command "analogWrite" when it is indeed using a digital output pin in a PWM output mode, giving a quasi analog output capability. Go by the reference given for analogWrite commands and wire it to an available PWM digital output pin.

Lefty

Related topics

Topic	Replies	Activity
DC Motor speed control	3	May 6, 2021
How-to drive a high power object	11	May 6, 2021

Topic	Replies	Activity
Control speed of DC Motor with potentiometer	10	May 6, 2021
Controlling the speed of a dc motor?	17	May 6, 2021
Moving DC Motor with different speeds	4	May 6, 2021